Revision	Description	Approved by	Date
01		T. Faber	17-10-2023

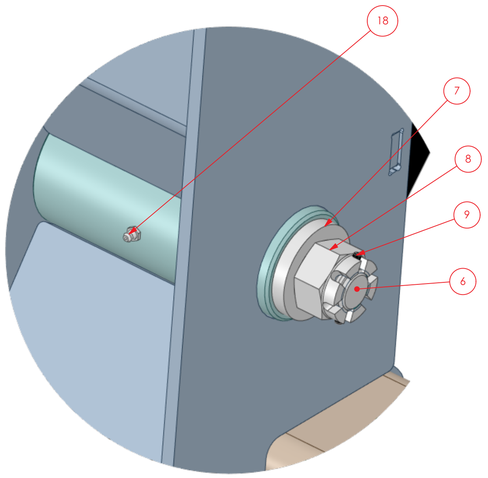

DETAIL A
SCALE 1:2

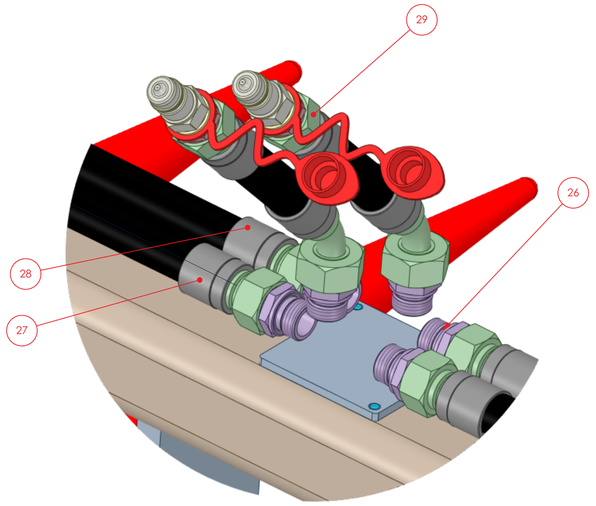

DETAIL B
SCALE 1:2

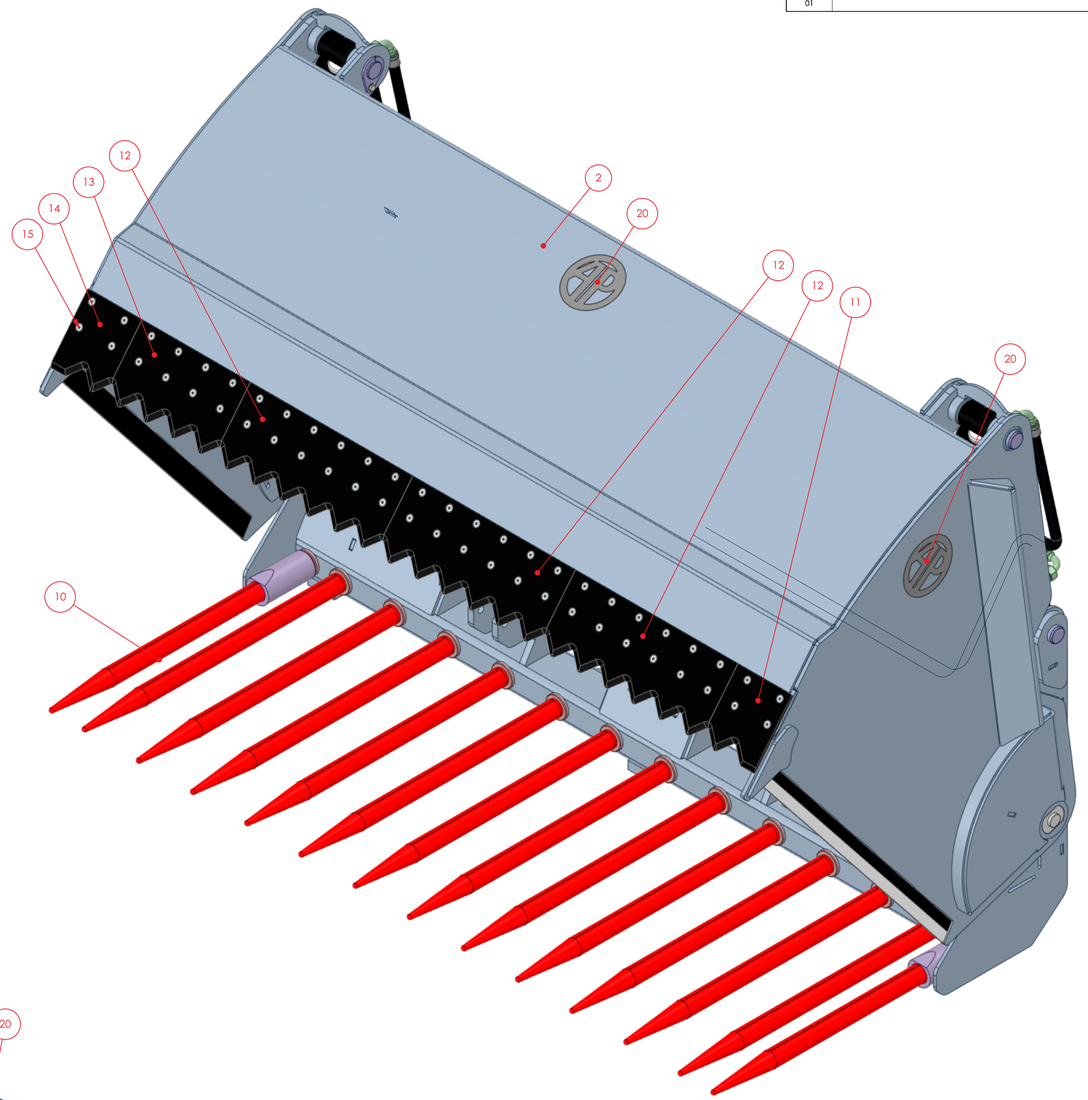

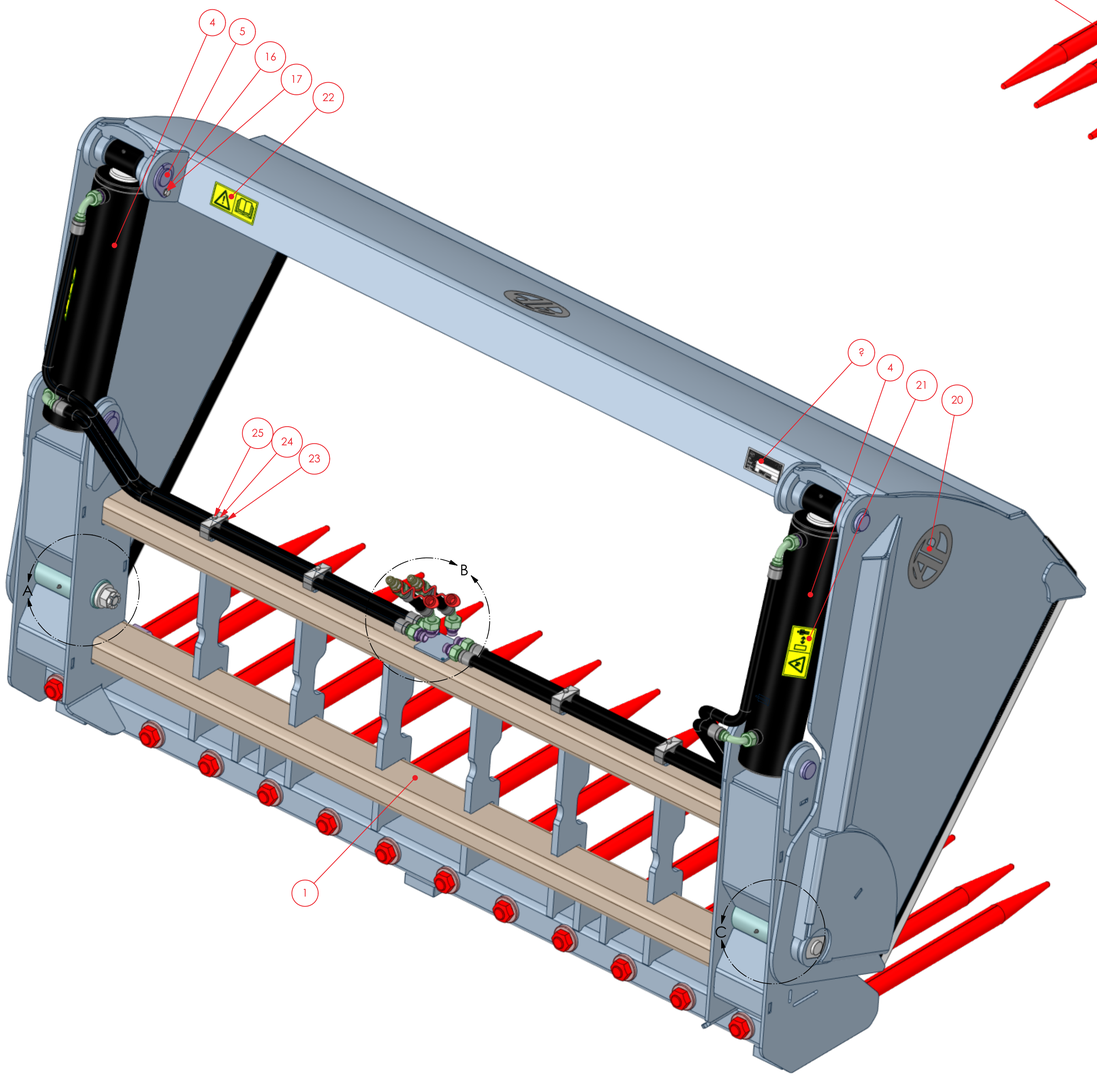

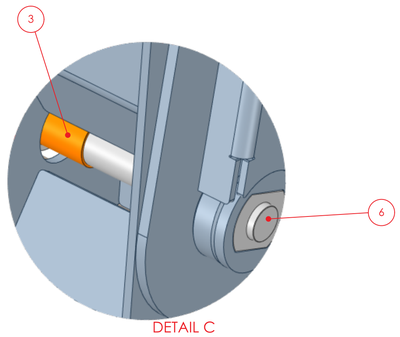

DETAIL C
SCALE 1:3

POS	NUMBER	REV	DESCRIPTION	NORM	QTY
29	X00026668	00	3/4" 22L 45° - Hydraulieklang 3/4" - Snelkoppeling man 1/2" L=1400		2
28	X00026696	00	3/4" 22L 90° - Hydraulieklang 3/4" - 3/4" 22L recht L=1900		2
27	X00026694	00	3/4" 22L 90° - Hydraulieklang 3/4" - 3/4" 22L recht L=1400		2
26	X00008760	00	Rechte inschroefkoppeling GE22LR3/4 -M+D	DIN 2353	10
25	X00000204	00	Tapbout M8 x 55 8.8 verz.	DIN 933	4
24	X00008762	00	Dekplaat pijpbeugel dubbel GD 3D 28mm	DIN 3015	4
23	X00008761	00	Pijpbeugel dubbel geprofileerd 428/28 PA	DIN 3015	8
22	X00000719	02	Sticker algemeen & handboek 145x65mm		1
21	X00000410	00	Sticker beknelling & afstand		2
20	X00000717	00	Sticker AP 180mm logo zilver		3
19	X00000407	01	Typeplaatje AP-machinebouw		1
18	X00000415	00	Smeernippel M8x1,25 180°	DIN 71412	6
17	X00000236	00	Tapbout M10 x 20 8.8 verz.	DIN 933	4
16	X00000243	01	Sluitring M10 verz.	DIN 125A	4
15	X00000422	00	Inbusbout verzonken kop M10x16 10.9 verz	DIN 7991	52
14	X00000426	00	Tandmes hoekmes Links L= 200mm 50CrMo4		1
13	X00000425	00	Tandmes L=400mm 50CrMo4		1
12	X00000424	00	Tandmes L=600mm 50CrMo4		3
11	X00000423	00	Tandmes hoekmes Rechts L=200mm 50CrMo4		1
10	X00008734	00	Rechte tand NT/NR	KK241127	14
9	X00000419	00	Spansliff 5x50	DIN 1481	2
8	X00000420	00	Kroonmoer M30 kl. 8 verz.	DIN 935	2
7	X00000421	00	Sluitring zwaar M30 verz.	DIN 7349	2
6	X00025982	01	KH NT Draaipunt pen verz.		2
5	X00001253	00	Borgpen ø50x250		4
4	X00025879	00	Cilinder D80-140-415 Bus Ø74 gat Ø50H12 L=100		2
3	X00025889	00	Gerolde glijlager 23BK -2 5060		4
2	X00025532	03	NT 2600 Snijframe las.		1
1	X00026064	02	NT 2600 Achterframe las.		1

Third angle projection (American)

Gen. Tolerances: ISO 2768 - m

Welding symbols: ISO 2553 (1994)

Surface Roughness: ISO 1302 (2002)

General roughness: 6.3

Geometrical tolerancing: ISO-1101 (2006)

Description: **Kuilhapper NT 2600 mont.**

Keywords:

Number: **X00026284**

Remark: /

MACHINE CONSTRUCTION

AGRICULTURE IRRIGATION EARTH MOVING

Ambachtstraat 21
8313 AV Rutten

Phone: +31 (0)527 618246
info@apmb.nl

Date: 17-10-2023	Category: Kuilhapper	Revision:	
Scale: 1:8	Designer: T. Faber	01	
Units: mm	Weight: 1516.514 Kg	Sheet: 1 of 1	
Format: A1	Material: S 235		

© This document is confidential and the information contained herein is a confidential disclosure. It is shown on the understanding it is not to be revealed to others or used for any other purpose without the written consent of AP-MACHINEBOUW B.V.