Revision	Description	Approved by	Date
00		Joeri Schutte	10-01-2020

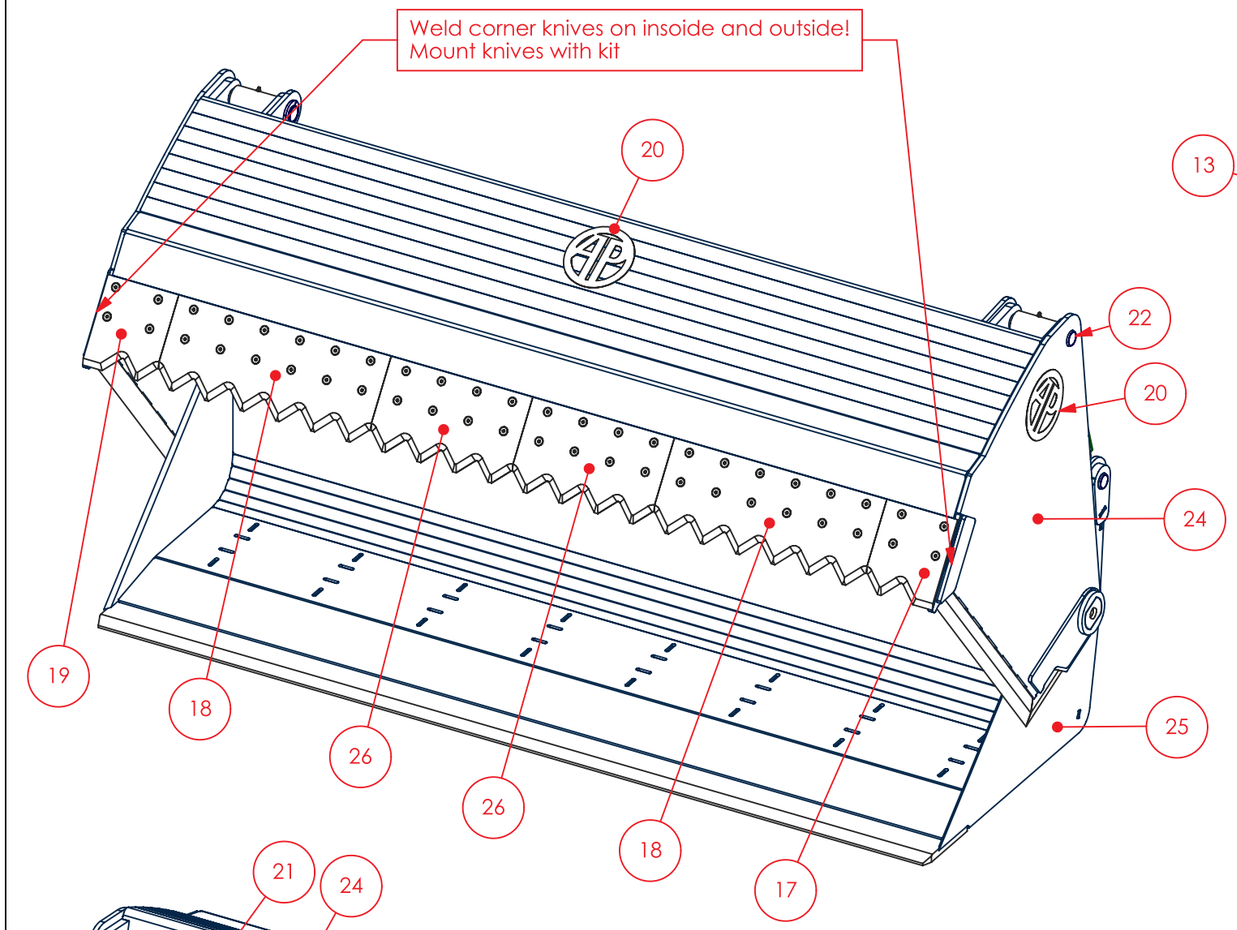

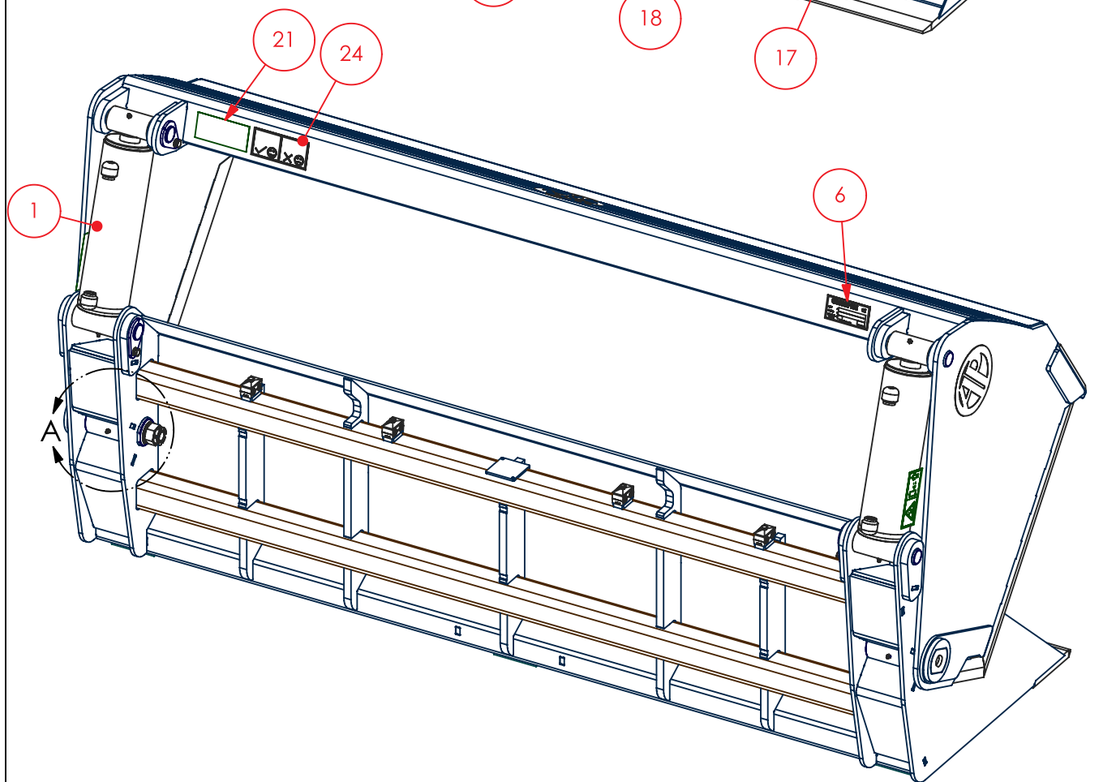

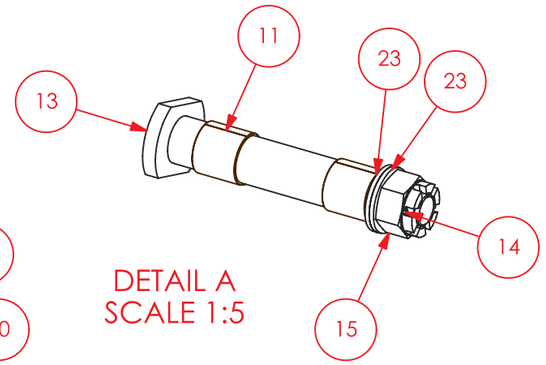

DETAIL A
SCALE 1:5

POS	NUMBER	REV	DESCRIPTION	NORM	QTY
26	X00000425	00	Tandmes L=400mm 50CrMo4		2
25	X00015534	00	FL 2400 Achterbak		1
24	X00015535	00	FL 2400 Snijframe		1
23	X00003978	01	Sluitring M30 verz.		4
22	X00001118	02	Borgpen ø40x200 verz.		4
21	X00000719	00	Sticker algemeen & handboek		1
20	X00000717	00	Sticker AP 180mm logo zilver		3
19	X00000426	00	Tandmes hoekmes Links L= 200mm 50CrMo4		1
18	X00000424	00	Tandmes L=600mm 50CrMo4		2
17	X00000423	00	Tandmes hoekmes Rechts L=200mm 50CrMo4		1
16	X00000422	00	Inbusbout verzonken kop M10x16 10.9 verz	DIN 7991	48
15	X00000420	00	Kroonmoer M30 kl. 8 verz.	DIN 935	2
14	X00000419	00	Spanstift 5x50	DIN 1481	2
13	X00000416	05	KH Draaipunt pen verz.		2
12	X00000415	00	Smeernippel M8x1,25 180°	DIN 71412	6
11	X00000414	00	Gerolde glijlager 23BK-2 4040		4
10	X00000413	00	Pijpbeugel dubbel geprofileerd 218/18 PA	DIN 3015	8
9	X00000412	00	Dekplaat pijpbeugel dubbel GD 2D 16/18mm	DIN 3015	4
8	X00000411	00	Sticker kuilhapvolgorde		1
7	X00000410	00	Sticker beknelling & afstand		2
6	X00000407	00	Typeplaatje AP-machinebouw		1
5	X00000243	00	Sluitring M10 verz.	DIN 125A	4
4	X00000240	00	Veerring M10 verz.	DIN 127B	4
3	X00000237	00	Tapbout M10 x 16 8.8 verz.	DIN 933	4
2	X00000212	00	Zeskantbout M8 x 45 8.8 verz.	DIN 931	4
1	X00014060	00	Cilinder D50-110-310 Bus ø60 gat ø40,4 L=129,5 L=113,5		2

Third angle projection (American)

Gen. Tolerances: ISO 2768 – m

Welding symbols: ISO 2553 (1994)

Surface Roughness: ISO 1302 (2002)

General roughness: 6,3

Geometrical tolerancing: ISO-1101 (2006)

Description: **Kuilhapper FL 2400 DB mont.**

Keywords:

Remark: /

Number: **X00015533**

MACHINE CONSTRUCTION

AGRICULTURE IRRIGATION EARTH MOVING

Ambachtstraat 21
8313 AV Rutten

Phone: +31 (0)527 618246
info@apmb.nl

Date: 10-01-2020	Category: Kuilhapper	Revision: 00
Scale: 1:15	Designer: Joeri Schutte	
Units: mm	Weight: 934,609 Kg	Sheet: 1 of 1
Format: A3	Material: Unknown Material	

© This document is confidential and the information contained herein is a confidential disclosure. It is shown on the understanding it is not to be revealed to others or used for any other purpose without the written consent of AP MACHINEBOUW B.V.